HYDROCORE LIMITED

The smart solutions for your business

Hydrocore™ Double Acting Oil Hydraulic Actuated Valve

AREAS OF APPLICATIONS

The Hydrocore oil-hydraulic isolating valve is used for remote isolating of pipeline applications and mainly used in:

- Industrial Water Systems
- Municipal Water Supply Systems
- Pump Stations
- Mine Water Reticulation
- Petro-chemical Plants

PRINCIPLES OF OPERATION

Once an electrical signal is given, the solenoid valve switches over, hydraulic fluid enters the cylinder opening compartment and pulls the valves shuttle towards the open position. Once power is removed the solenoid valve switches to the original position, hydraulic fluid enters the cylinder closing compartment and pushes the valve shuttle to the closed position. In the event of a power failure, the power pack's accumulator, provides enough oil pressure and oil volume to close the valve. The open and closing speeds can be set separately to prevent water hammer when the valve closes.

INTEGRATED ACTUATOR

The oil-hydraulic valve's actuator is a natural and integrated part of the valve. This type of actuator is ideal for plants or pump stations, where a hydraulic power pack can energise many valves.

The advantages of the oil-hydraulic actuation are:

- Clean and lubricating type actuating fluid.
- No possibility of contaminating of the actuating fluid.
- Extremely powerful actuator, producing high actuating forces.
- Off-the-shelf standard variety of hydraulic valves, fittings and hydraulic components to enable any control or safety applications.
- Cost effective and reliable actuating and control system.
- Closing and opening speeds can be set individually. Any speed can be achieved, does not matter how fast or slow.
- The valve can be made fail to close or fail to open.
- The opening / closing signal can be 24VDC or 110VAC or 220VAC
- The valve can be changed to a control valve by changing the solenoid valve
- Open / Close limit switches

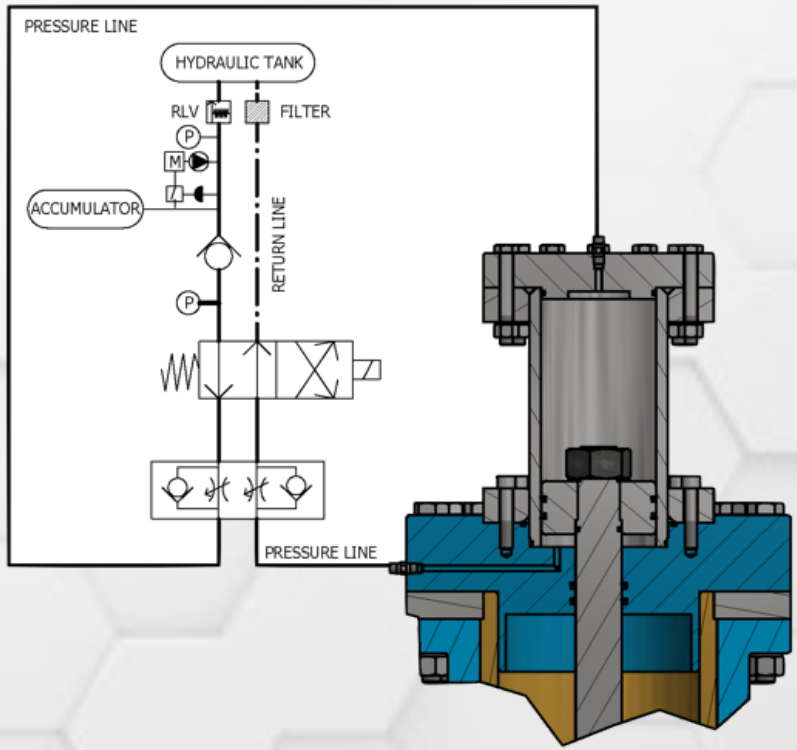

This document is the property of Hydrocore™ Limited and may not be reproduced or copied, nor may the design or any information thereon be disclosed to any third party without the expressed permission of the above company.

HYDROCORE LIMITED

The smart solutions for your business

Hydrocore™ Double Acting Oil Hydraulic Actuated Valve

HISTORY OF THE HYDROCORE™ VALVE

The concept of the Hydrocore™ isolating valve was developed from the tried and tested NGD™ isolating valve. For fourteen years the NGD™ isolating valve has been a simple and reliable solution for isolating line fluid in a piping system. But, due to the rising running costs, the valve needed a new and revised way of isolation. With the new Hydrocore™ design there is a substantial drop in the differential pressure due to the inclined bores. This in turn increases the valves flow coefficient and thereby reduces the running costs of the valve.

LOW TORQUE, LOW CLOSING FORCES

The Hydrocore™ isolating valve is hydrostatically balanced, requiring very low operating torque or operating forces at all valve positions and for all valve sizes and all pressure ratings.

NO GEARBOX

No gearbox is required to assist in the valve's opening and closing for the handwheel operated valves. The valve derives its actuating power directly from the line fluid pressure.

MAINTENANCE

The Hydrocore™ isolating valve is simple and reliable with a robust construction. Very little maintenance is required, it can be undertaken by semi-skilled personnel and with a short downtime period.

INSTALLATION POSITION

The valve can be installed in any position.

MEDIA

Liquid and gas with low content of suspended solids.

PIPE SIZES

2"(50NB) to 16"(400NB)

FLANGES

SABS 1123, BS4504, BS10,
ASME B16.34, ANSI B16.5

COUPLINGS

Tapered shoulders and other pipe couplings

PRESSURE

Up to 3750 psi (25MPa) pressure rating.

TEMPERATURE RATINGS

Up to 85°C with standard seals.

PH LEVELS & CHLORIDES

Parts of the valve are made from stainless steel and can withstand a low level of chlorides.

INSTALLATION POSITION

The valve can be installed in any position.

SEATING

Seat Leakage - B16.104 class III, IV, V or VI, depends on valve type and application.

This document is the property of Hydrocore™ Limited and may not be reproduced or copied, nor may the design or any information thereon be disclosed to any third party without the expressed permission of the above company.

For more information please visit our website www.hydrocore.tech

HYDROCORE LIMITED

The smart solutions for your business

Hydrocore™ Double Acting Oil Hydraulic Actuated Valve

ADVANTAGES OF THE HYDROCORE™ VALVE OVER BALL VALVES

Crippled gearboxes, cavitation from high differential pressures and longer lead times are three serious flaws of ball valves that the Hydrocore™ valves are spared from.

GEARBOX MALFUNCTIONING

A common frailty of ball valves occurs in chilled water sections, where condensation enters the gearbox, and removes the grease within. This in turn causes the gearbox internal parts to corrode and prevents the ball valve from isolating. In contrast, the Hydrocore™ and NGD™ isolating valves have fewer working parts than ball valves, are hydrostatically balanced and do not require a gearbox. They, therefore have no such flaw, even when these valves have been inactive for a long period of time. This was evident when an audit of the cooling coils was conducted on the VCR below 120 Project. Every single NGD™ and Hydrocore™ isolating valve seated completely, even after many years of standing idle in the system. Some NGD™ isolating valves with broken spindles had to be isolated by means of a vice grip, and even under these conditions, the valves could be isolated.

BALL VALVE ILLUSTRATION

HIGH DIFFERENTIAL PRESSURES

When the ball valve is in a closed position and there is a high differential pressure between the upstream and downstream, and the valve is initially opened, the seat of the ball valve cavitates tremendously. Within a few operations the ball valve has to be decommissioned and the body and ball seat need to be repaired or replaced.

In contrast, both the NGD™ and Hydrocore™ isolating valves have a natural anti-cavitation area above the seat preventing this from happening. Furthermore, the moving parts of Hydrocore™ and NGD™ isolating valves are manufactured from stainless steel. Their body seat is also made from stainless steel thus increasing the valves durability and longevity.

Furthermore, in the audit, it was proven that the NGD valve did not cause excessive flow loss and after some simple maintenance on the cooling coils was completed, all the cooling coils operated at the correct flow.

This document is the property of Hydrocore™ Limited and may not be reproduced or copied, nor may the design or any information thereon be disclosed to any third party without the expressed permission of the above company.

For more information please visit our website www.hydrocore.tech

HYDROCORE LIMITED

The smart solutions for your business

Hydrocore™ Double Acting Oil Hydraulic Actuated Valve

HOW MUCH DOES IT COST?

This question is probably the only question posed to any marketing personnel when a high pressure valve is being inquired. However, there are several more questions that should be asked when considering a high pressure valve in a mining setting:

- Valve Flow Co-efficient (Cv)
- Simplicity of Design
- Maintenance and Servicing
- Valve Longevity

Below is a comparison of these points between the Hydrocore™ Isolating Valve versus a Standard Isolating Globe Valve (**SIGV**)

VALVE FLOW CV

One of the primary costs after the initial capital outlay is running costs, especially in a pump station. A valve's Cv determines the pressure drop between the inlet and outlet ports of the valve. The lower the pressure drop the higher the Cv, which in turn results in lower power consumption of the pump.

We have modelled a SIGV to determine its Cv (see figures below).

The table below shows the power penalty cost of a Hydrocore Isolating Valve versus a SIGV.

As is evident, the cost savings using a Hydrocore Isolating Valve versus a SIGV are astronomical even within the first couple of years. Assuming that the price of electricity is not going to go down in the future, those cost savings will only increase.

PARAMETERS	UNIT	HYDROCORE	SIGV
Nominal Working Pressure	Bar	100	100
Flow Rate	Lit/Sec	106	106
Flow Coefficient	**Cv**	**1086**	**360**
Cost of penalty per hour	R/kWh	0.82	0.82
Cost of penalty per hour	$/kWh	0.06	0.06
Pump efficiency (%)	%	84%	84%
RESULTS	**UNIT**	**HYDROCORE**	**SIGV**
Differential Pressure Losses	Bar	0.166	1.515
Valve Power Losses	kW	1.942	17.673
Annual Penalty (operating 24 hours per day)	**Rand**	**13,950**	**126,947**
	USD	**996**	**9,068**

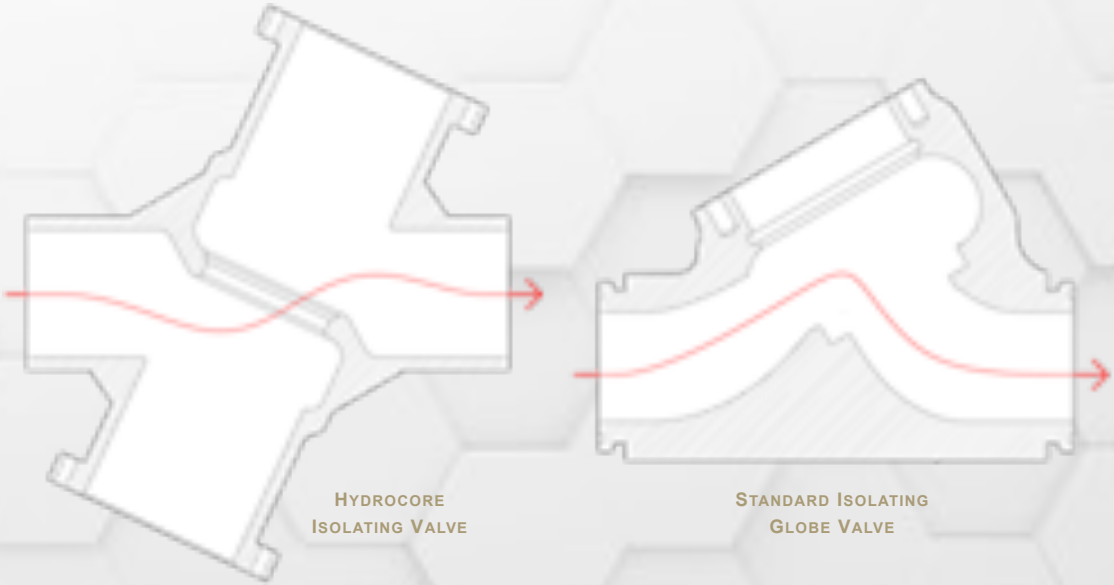

This document is the property of Hydrocore™ Limited and may not be reproduced or copied, nor may the design or any information thereon be disclosed to any third party without the expressed permission of the above company.

For more information please visit our website www.hydrocore.tech

HYDROCORE LIMITED

The smart solutions for your business

Hydrocore™ Double Acting Oil Hydraulic Actuated Valve

SIMPLICITY OF DESIGN

A complicated valve is a valve that invariably will have issues once the valve is commissioned. The simpler the design the better. This should also be taken into account when considering a Hydrocore Isolating Valve versus a standard globe valve.

MAINTENANCE AND SERVICING

The more moving parts in any valve design the more prone the valve will be to constant maintenance and servicing. This is even more of a concern in a mining setting where conditions are not optimal for smooth valve functioning. The Hydrocore Isolating Valve is simple to maintain and service compared with a SIGV.

VALVE LONGEVITY

This point is built on the previous two points. If a valve keeps on breaking down and requires constant servicing and maintenance, then the valve is no more an asset. In fact, it is now an obstacle to the smooth running of a mine. Inevitably, the valve gets replaced by another brand. The Hydrocore Isolating Valve, if maintained on a regular basis, will be keep on functioning indefinitely.

ILLUSTRATION OF THE HYDROCORE VALVE WITH ONLY ONE MOVEABLE PART

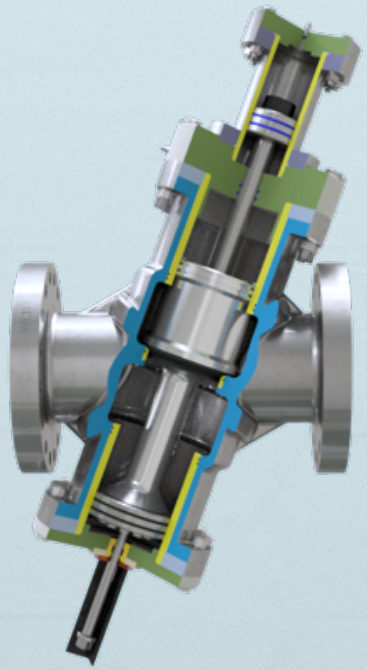

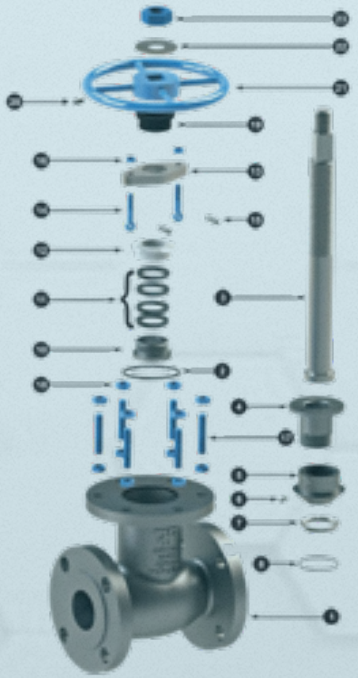

ILLUSTRATION OF A STANDARD GLOBE VALVES WITH THEIR MANY MOVEABLE PARTS

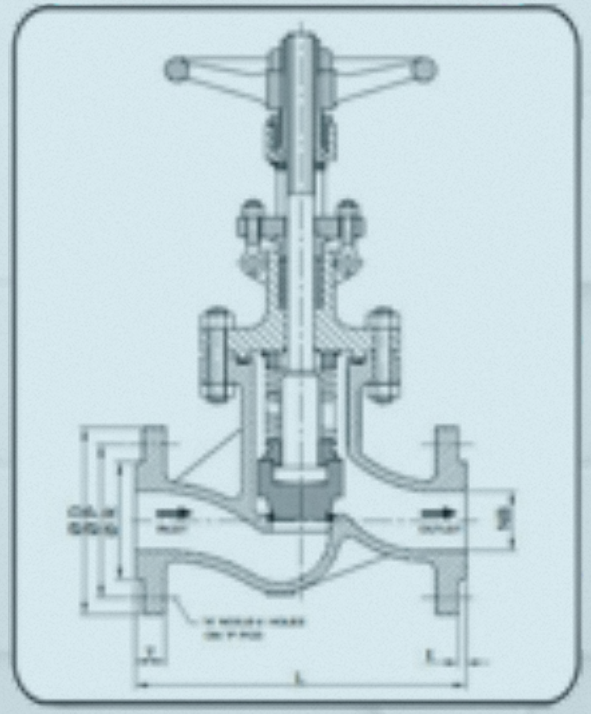

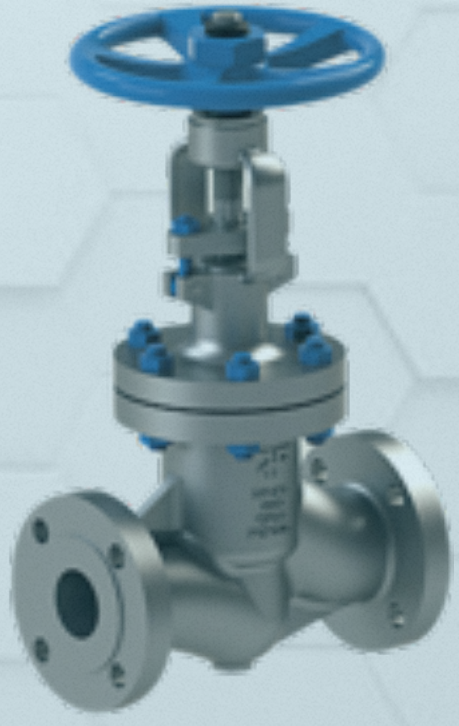

This document is the property of Hydrocore™ Limited and may not be reproduced or copied, nor may the design or any information thereon be disclosed to any third party without the expressed permission of the above company.

For more information please visit our website www.hydrocore.tech

HYDROCORE LIMITED

The smart solutions for your business

Hydrocore™ Double Acting Oil Hydraulic Actuated Valve

PARTS LIST

PART	DESCRIPTION	MATERIAL
1	Body	Mild Steel
2	Body Seat	Stainless Steel
3	Shuttle	Mild Steel
4	Shuttle Bottom	Stainless Steel
6	Shuttle Seat	Stellite
7	Body Sleeve	Stainless Steel
8	Bottom Cover	Mild Steel
9	Top Cover	Mild Steel
10	Sleeve Cover	Mild Steel
11	Spindle	Stainless Steel
13	Limit Rod	Stainless Steel
14	Cam	Stainless Steel
15	Oil Compartment	Stainless Steel

** Seal Material - Nitrile, Viton, EPDM, Polyurethane*

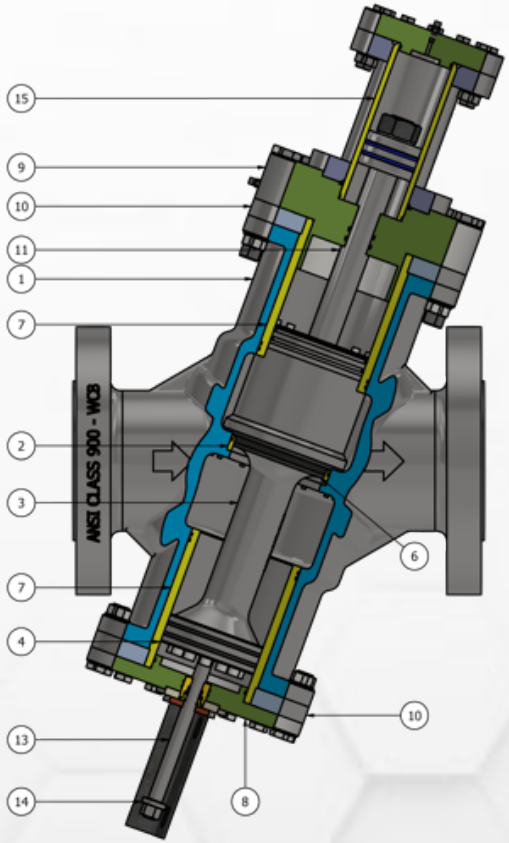

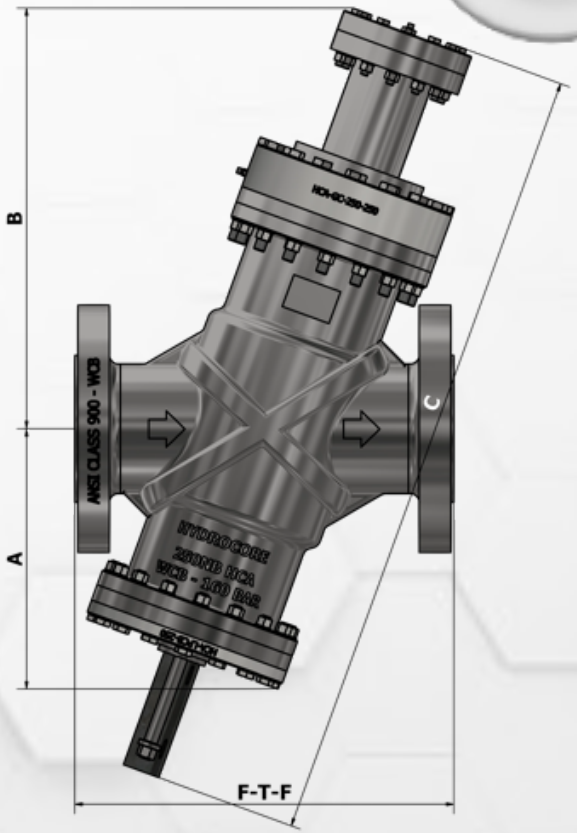

DIMENSIONS & WEIGHTS									FLOW COEFFICIENTS		PRESSURE & FLOW RATES	
NB	A	B	C	#150 F-T-F	#300 F-T-F	#600 F-T-F	#900 F-T-F	#1500 F-T-F	CV	ΔP (PSI)	MAX PRESSURE	MAX FLOW
150	381 mm	TBD	TDB	559mm / 229kg	559mm / 245kg	559mm / 270kg	610mm / 297kg	705mm / TBD	525	12.5	160 bar	117 ℓ/sec
200	494 mm	TBD	TDB	660mm / 405kg	660mm / 429kg	660mm / 460kg	737mm / 509kg	832mm / TBD	1086	1.4	160 bar	152 ℓ/sec
250	573 mm	929 mm	1743 mm	787mm / 744kg	787mm / 778kg	787mm / 840kg	838mm / 891kg	991mm / TBD	1433	6.7	160 bar	233 ℓ/sec
300	652 mm	TDB	TDB	838mm / 1052kg	838mm / 1098kg	838mm / 1164kg	965mm / 1277kg	1130mm / TBD	1936	7.9	160 bar	337 ℓ/sec

This document is the property of Hydrocore™ Limited and may not be reproduced or copied, nor may the design or any information thereon be disclosed to any third party without the expressed permission of the above company.

For more information please visit our website www.hydrocore.tech